C21

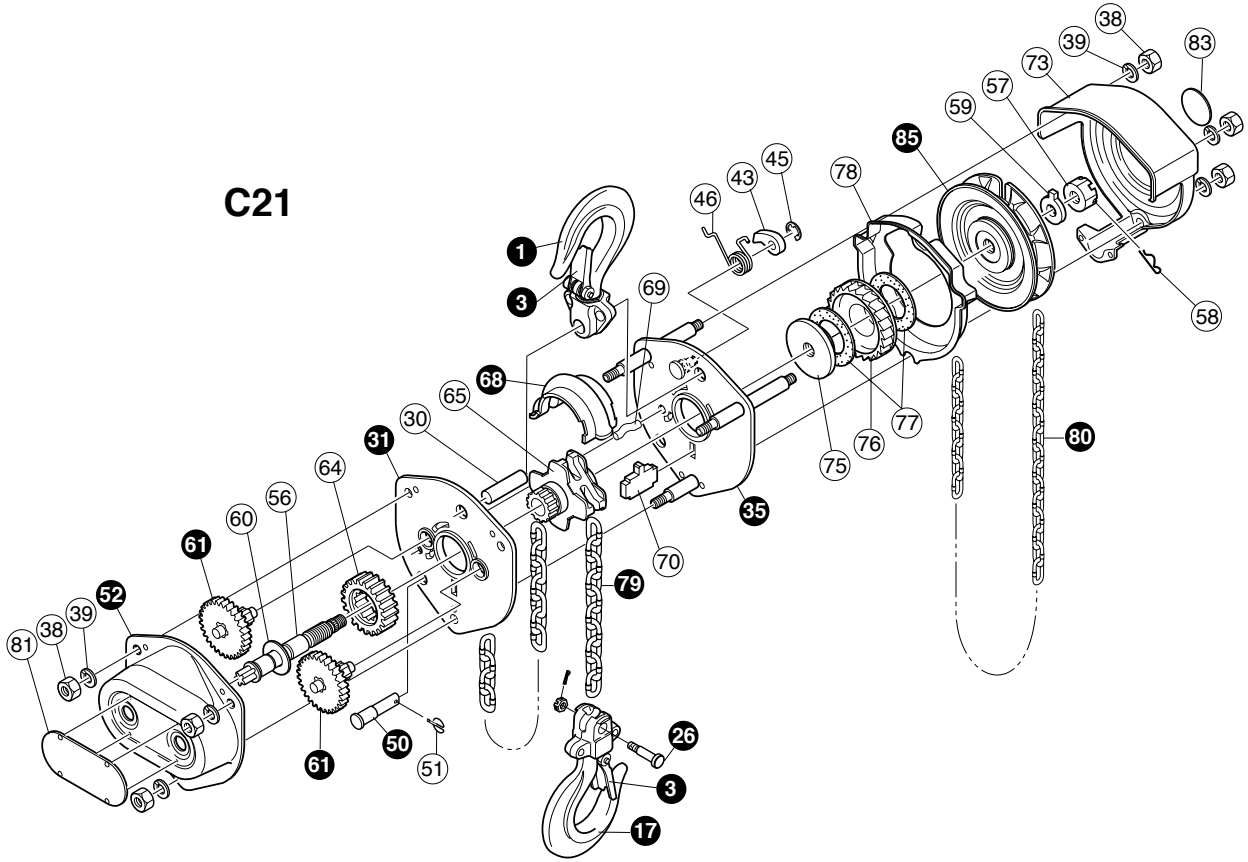

3t

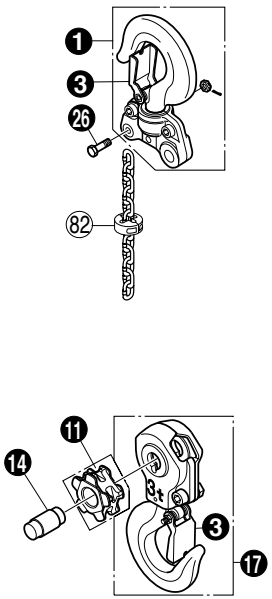

5t

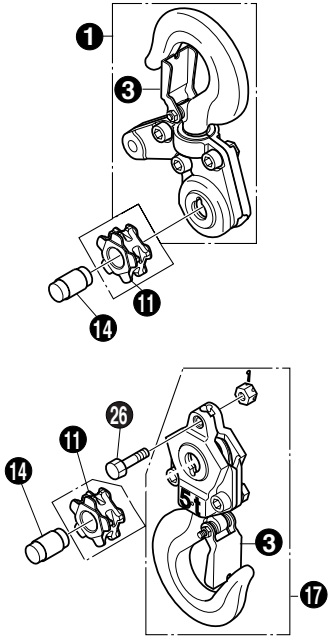

ELEPHANT
LIFTING PRODUCTS™

C-21 type Spare Parts Price List

Catalog No.		Part No.	Parts Name	Capacity						Remarks
Set No.	Indvdl No			0.5 t	1 t	1.5 t	2 t	3 t	5 t	
1		100	Top hook assy.							
	3	615,616,617	Safety latch assy.							
30		105	Top hook pin							
17		600	Bottom hook assy.							
	3	615,616,617	Safety latch assy.							
26		604,5,6,7	Chain stop bolt assy.							
31		200	Gear side plate assy.							
		404	Load metal							
		307	Pinion metal							
35		220	Wheel side plate assy.							
		203	Stay bolt							
		404	Load metal							
		511	Pawl pin							
38		206	Hex. nut (for Wheel cover)							
38		213	Hex. nut (for Gear case)							
39		207	Spring washer (for Wheel cover)							
39		214	Spring washer (for Gear case)							
43		510	Pawl							
45		514	E ring							
46		512	Pawl spring							
50		226	Chain stop pin assy.							w/227 Clip
	51	227	Clip							
52		208	Gear case assy.							
		307	Pinion metal							
56		301	Pinion shaft							
57		308	Castle nut							
58		312	R pin							
59		508	Check washer							
60		302	Washer for pinion shaft							
61		303/304	2nd/3rd gear set							
64		305	Load gear							
65		401	Load sheave							
68		405	Chain guide							
69		433	Chain guide pin							
70		406	Chain stripper							
73		218	Hand wheel cover							
74		501	Hand wheel							
75		505	Disc hub							
76		506	Ratchet wheel							
77		507	Friction disc							Price is per 1pce
78		513	Brake cover							
81		920	Name plate							with 4 rivets